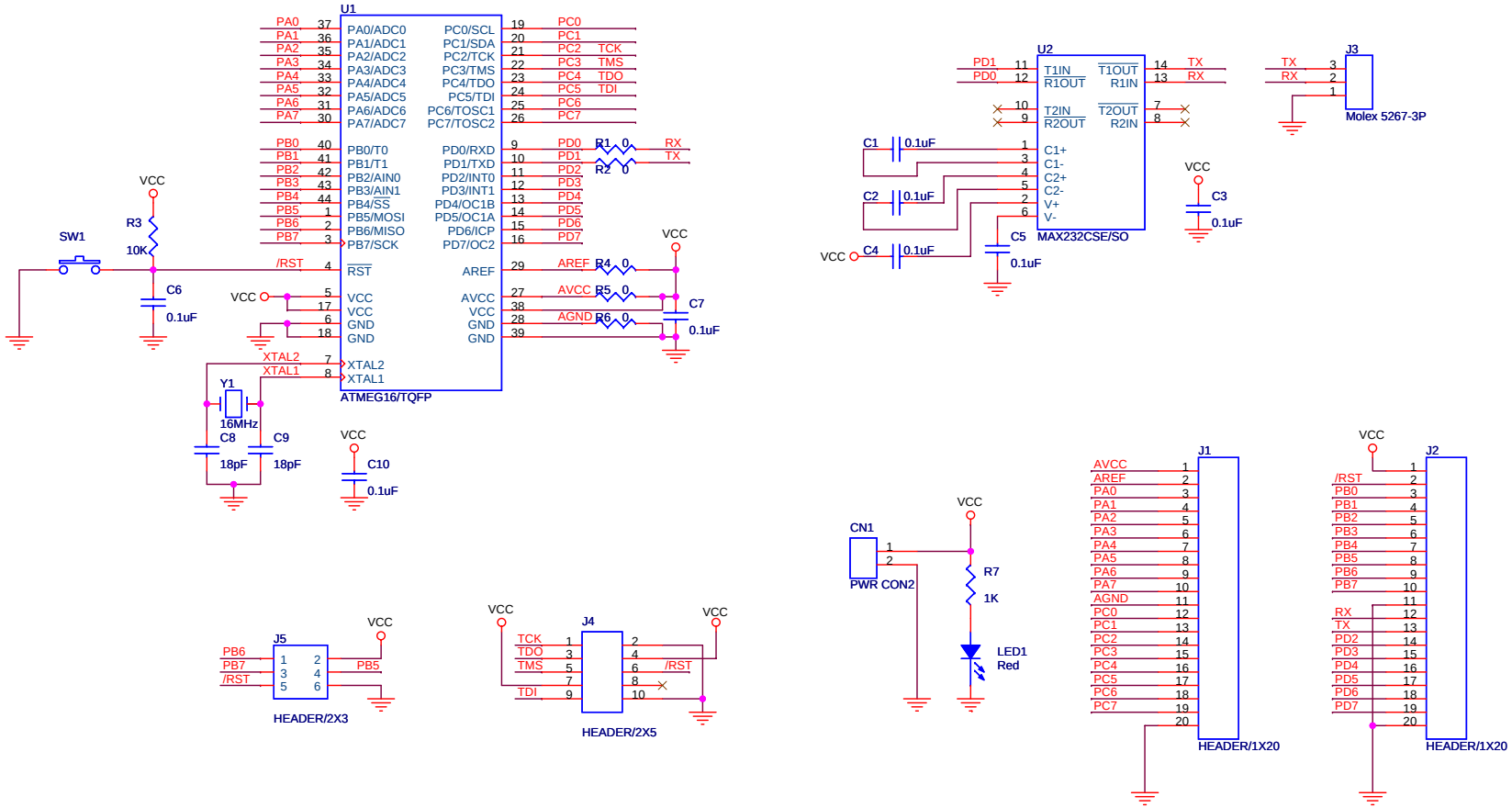

NO	DATE	REV	REV'D BY	APP'D BY
1	06.08.25	1.2	J.H.Kim	J.H.Kim

AVRMALL.com

PROJECT			DRAW BY	APPROVED BY	TITLE	Rev
ATmega16 Board			J.H.Kim	<Cage Code>	ATmega16 V1.2 Circuit Diagram	RevB
DATE	Scale	Size	DESIGN BY		DRAWING NO.	Sheet
Friday, August 25, 2006		B	J.H.Kim		ATmega16_V1.2 -CD-001	1 of 1